ROHS

PRODUCT SPECIFICATION

240*96 DOTS LCD MODULE
MODEL: G2409A4BRNFG-A0 Ver:1.0

< ◇> Preliminary Specification

< ◆> Finally Specification

CUSTOMER'S APPROVAL	
CUSTOMER :	
SIGNATURE:	DATE:

APPROVED BY	PM REVIEWED	PD REVIEWED	PREPARED BY

Revision Status

Version	Revise Date	Page	Content	Modified By
Ver 1.0	2018-02-02		First Issued	

Table of Contents

1. Technology Description

BCD (Bi-stable Cholesteric Display) is a sunlight readable reflective LCD with extremely low power consumption characteristics. Due to the non-volatile memory feature of the technology, zero power is required to retain the image of the display. Energy is only required to change the displayed image. No backlighting is required, only ambient lighting from the surrounding is required. Readability when under direct sunlight is excellent and good contrast from viewing at very wide angles are possible.

2. Typical Applications

This module is intended for general purpose graphic and character display applications.
Suggested uses include instrumentation, remote control, electronic product or price label, point of sale display, general purpose indoor or outdoor signage and information display.

3. General Description

The features of LCD are as follows

* Passive matrix bistable cholesteric LCD graphic module
* Color : Black & Yellow
* Display Type :BCD
* Driver/Controller IC :SSD1655
* Interface Input Data : SPI Interface
* Driving scheme : Special BCD driving scheme
* Driving Method : 1/96 Duty,static
* Viewing Direction : Full Viewing
* Backlight : Without
* Polarizer Mode : Without polarizer
*Sample NO. : -

4. Mechanical Specifications

The mechanical detail is shown in Fig. 1 and summarized in Table 1 below.

Table 1

Item	Specification	Unit
Module Size	61.5(W) x32.0(H) x 2.2(D)	mm
Active Area	48.47(W) x 23.03(H)	mm
Viewing Area	50.5 MIN(W) x28.0 MIN(H)	mm
Number of Dots	240 X96 Dots	-
Dot Size	0.192(W) x 0.23(H)	mm
Dot pitch	0.202(W) x 0.24(H)	mm

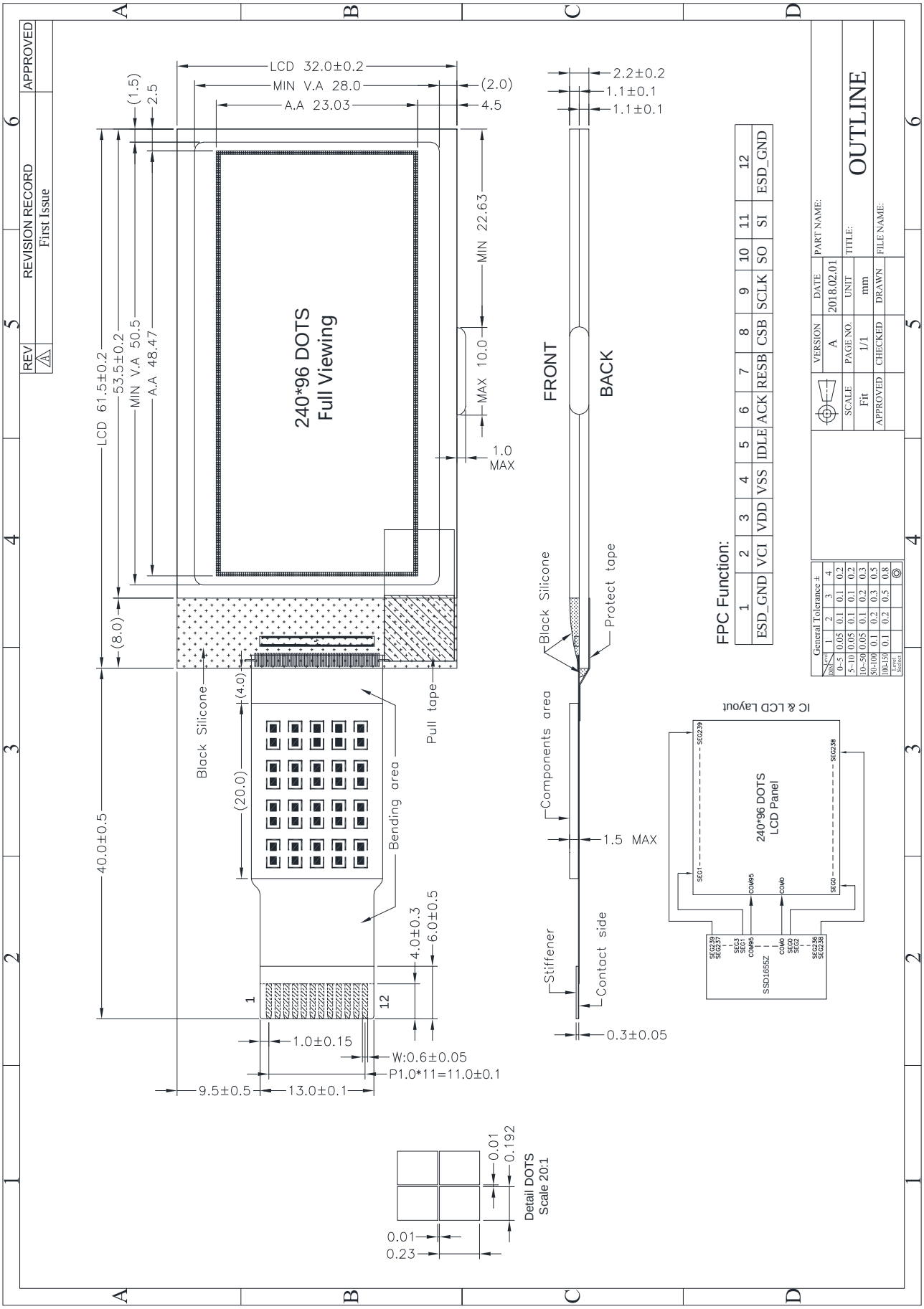

Figure 1: Module Specification

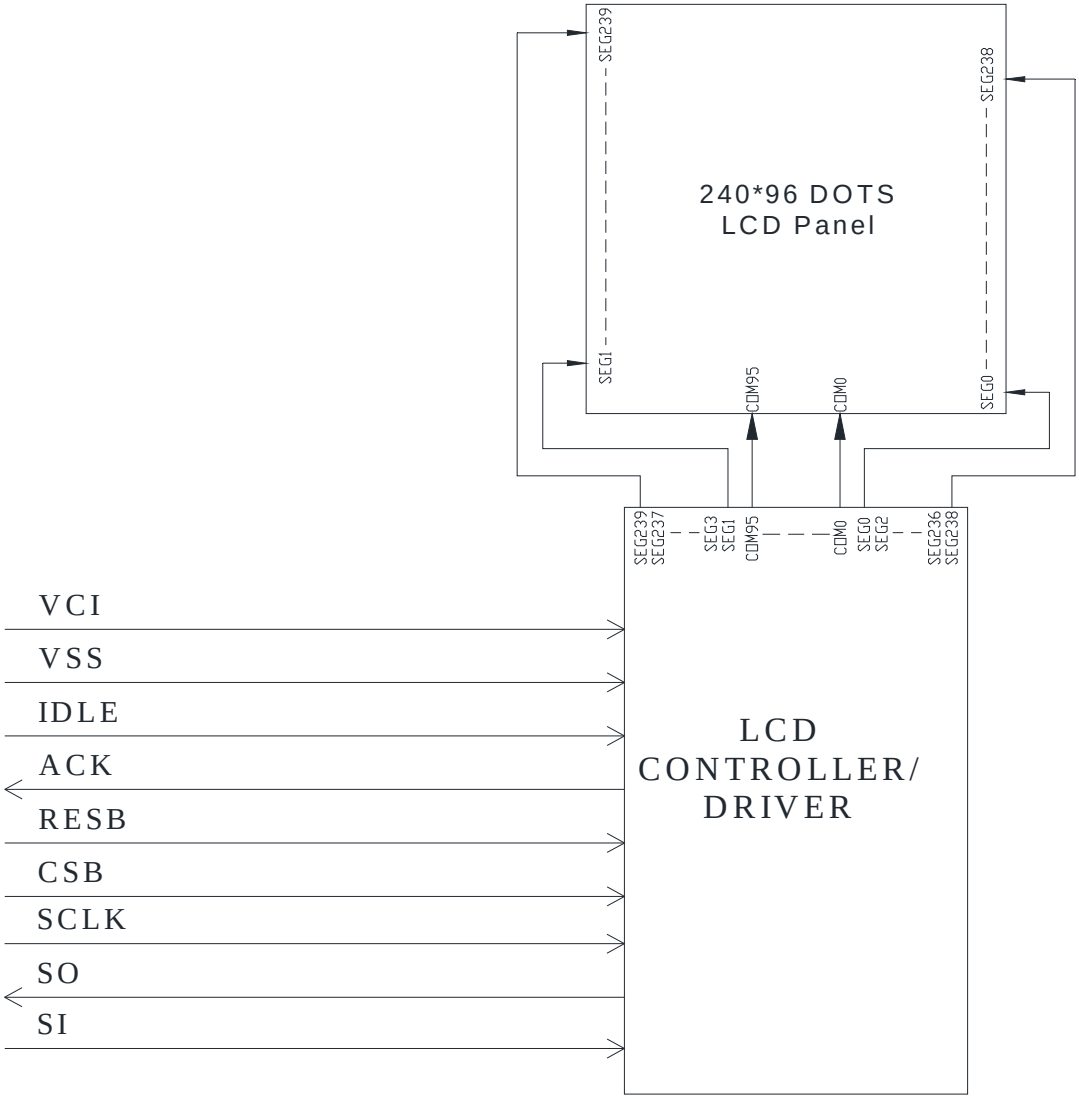

Figure 2: Block Diagram

5. Interface Signals

Table 2

PIN NO.	SYMBOL	FUNCIONS
1	ESD_GND	ESD
2	VCI	Power supply for analog part of the chip.(+3.0V)
3	VDD	This is the VDD regulator output pin.(NC)
4	VSS	Ground.
5	IDLE	When this pin is at low level, the driver IC will enter Sleep mode. RAM content and register will be retained in this mode.When this pin is at high level, the driver IC will resume to IDLE mode.
6	ACK	This is an output pin indicating the status of the chip in the following way
7	RESET	This pin is the reset signal input. Initialization of the chip is started once this pin is pulled low. Minimum pulse width for reset sequence is 20us.
8	CSB	These pins are the chip select inputs for communication between MCU. To select the chip CS# must be low.
9	SCLK	SPI clock signal
10	SO	SPI data output from IC
11	SI	SPI data input to IC
12	ESD_GND	ESD

6. Absolute Maximum Ratings

6.1 Electrical Maximum Ratings-For IC Only

Table3

Parameter	Symbol	Conditions	Min.	Max.	Unit
Supply Voltage	V_{CI}	TA=+25℃, Referenced to V_{SS} = 0V	-0.3	+4.0	V
	V_H		-0.3	+42	V
	V_{in}		V_{ss} - 0.3	V_{DDIO} + 0.3	V

Note1: TA = +25℃.

Note2: The maximum applicable voltage on any pin with respect to VSS (0V).

Note3: The modules may be destroyed if they are used beyond the absolute maximum ratings.

6.2 Environmental Condition

Table4

Item	Operating temperature (Topr)		Storage temperature (Tstg)		Remark
	Min.	Max.	Min.	Max.	
Ambient temperature	-20◦C	+70◦C	-30◦C	+80◦C	Dry
Humidity	90% max. RH for Ta ≤ 40°C < 50% RH for 40°C < Ta ≤ Maximum operating temperature				No condensation
Packing vibration(GB/T5170.14-2009)	Frequency range:10Hz~50Hz Acceleration of gravity:5G X,Y,Z 30 min for each direction.				3 directions

Note : Product cannot sustain at extreme storage conditions for long time.

7. Electrical Specifications

7.1 Typical Electrical Characteristics

At Ta = 25 ˚C, VCI = +3.0V± 5%, VSS=0V.

Table5

Parameter	Symbol	Conditions	Min.	Typ.	Max.	Unit
Supply voltage (System)	VCI-VSS		2.0	-	3.8	V
	VLCD		-	28	-	V
Input signal voltage low	V_{IL}		0	-	$0.2V_{DDIO}$	V
Input signal voltage high	V_{IH}		$0.8V_{DDIO}$	-	V_{DDIO}	V
Supply current	ICI	VCI=3.0V	-	-	-	mA

* Internally Generated

7.2 TIMING Specifications

At Ta = +25 ˚C, VDD = 1.8V

Table 6

SPI Timing Characteristics (VDD=1.8V, Temperature = 25°C)

Symbol	Parameter	Min	Typ	Max	Unit
f_{SCLK}	SCLK frequency			10	MHz
tsp	CS# low to positive edge on SCLK, in active mode	20			ns
tch	SCLK Clock high	50			ns
tcl	SCLK Clock low	50			ns
tr	SCLK clock rise time			5	ns
tf	SCLK clock fall time			5	ns
tsu	Setup data before positive edge on SCLK	20			ns
thd	Hold data after positive edge on SCLK	20			ns
tcq	Negative edge on SCLK to SO output			30	ns
tns	Negative edge on SCLK to CS# high	20			ns
tsz	Positive edge on CS# to SO Hiz			20	ns
tss	CS# deselect time	100			ns

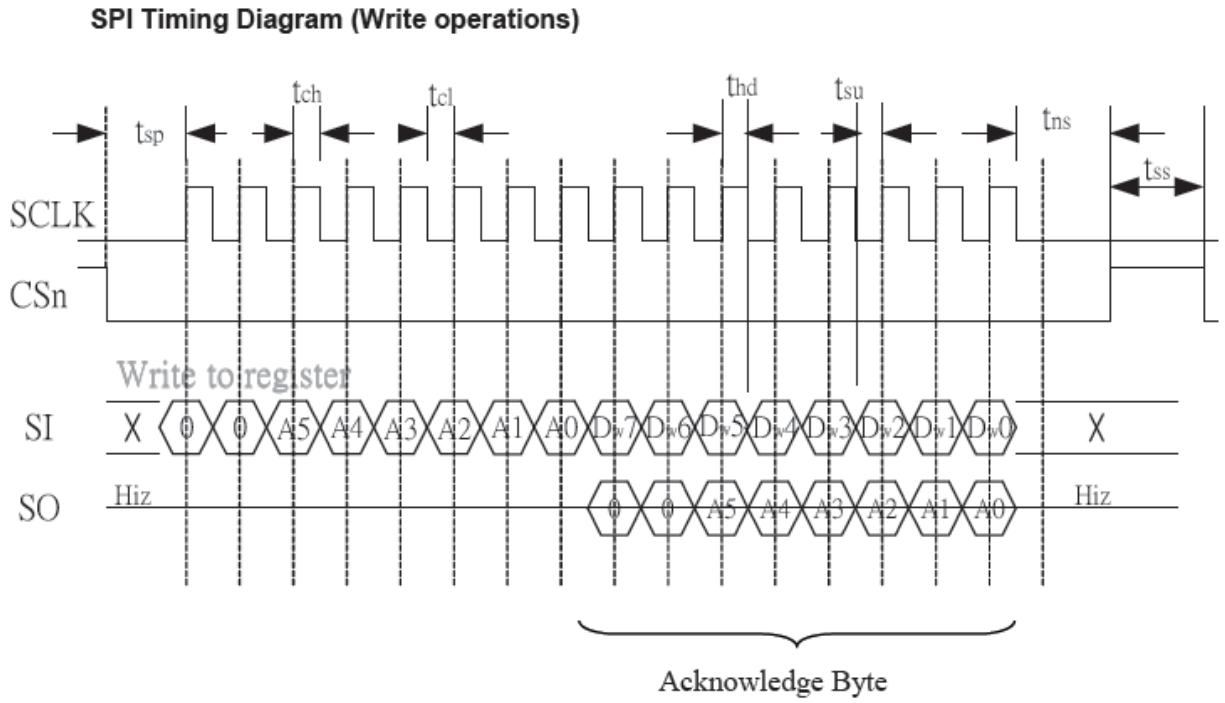

Figure 4:Timing characteristic of Serial Interface

7.3 DEEPSLEEP/SLEEP/IDLE Timing Characteristics

Table 7: Table

Parameter	Min	Typ	Max	Unit
IDLE to SLEEP		1		μs
SLEEP to IDLE		1000		μs
DEEPSLEEP Command to DEEPSLEEP		1		μs
DEEPSLEEP to IDLE		1000		μs

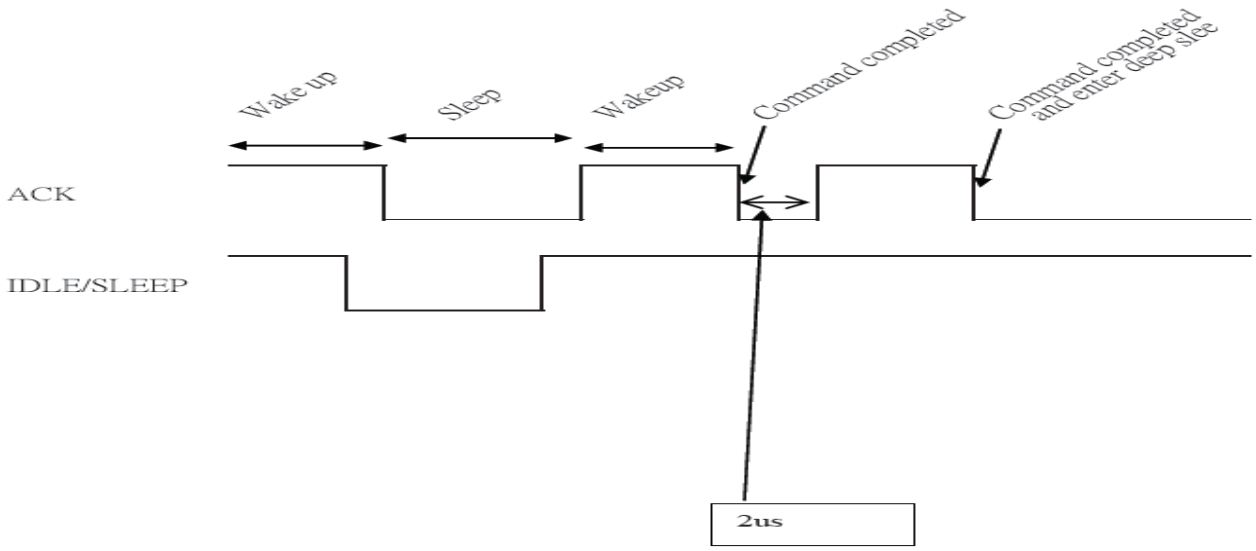

8. Optical Characteristics at 25℃

Table 8

Item	Symbol	Value			Unit	Condition	
		Min.	Typ.	Max.			
Image refresh time	-	-	-	-	S	VDD=1.8V, VLCD =24V, @25 L	
Contrast ratio	CR	-	8	-	-	-	
Optimum viewing area Cr ⩾ 2	θ1(6 o'clock)	-	80	-	DEG	ϕ = 0°	Vop= Optimum voltage
	θ2(12 o'clock)	-	80	-			
	ϕ1(3 o'clock)	-	80	-		ϕ = 0°	
	ϕ2(9 o'clock)	-	80	-			

8.1 Optical Characteristics Definition

8.1.1 Viewing Angle

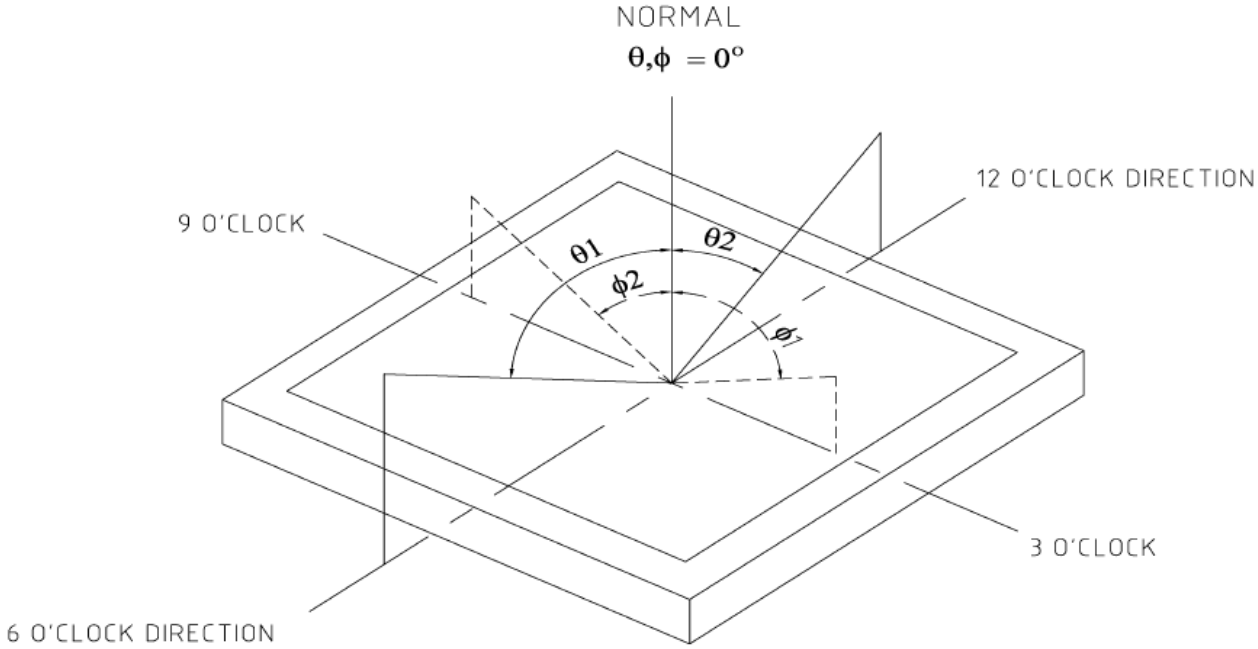

Figure 5

8.1.2 Contrast Ratio

B1 = pixel luminance at stable dark state

B2 = pixel luminance at stable bright state

Contrast Ratio = B2/B1

9. QUALITY SPECIFICATIONS

9-1. LCM Appearance and Electric inspection Condition

1. Inspection will be done by placing LCM 30cm away from inspector's eyeballs under normal illumination.

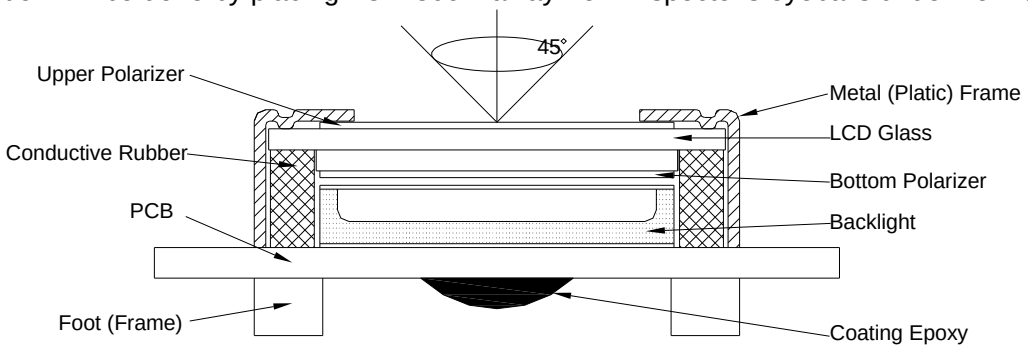

2. View Angle: with in 45°around perpendicular line.

9-2. Definition

1. COB

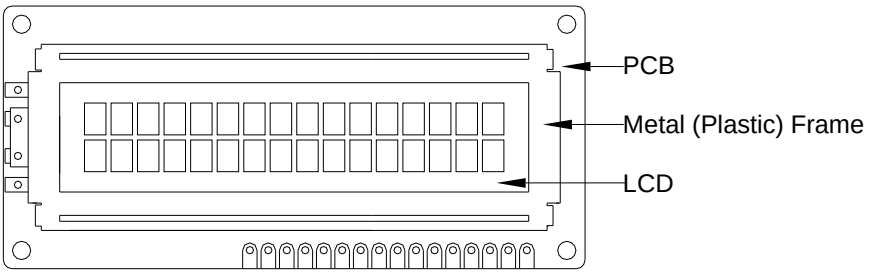

2. Heat Seal

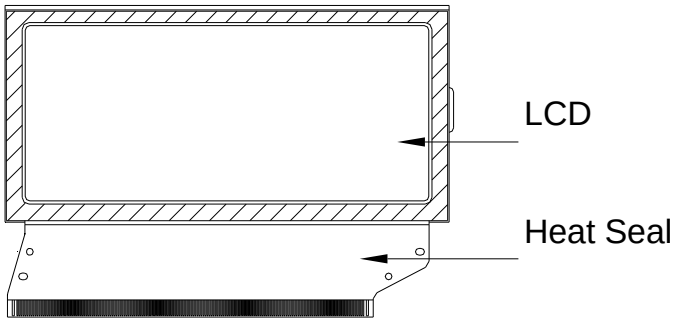

3. TAB and COG

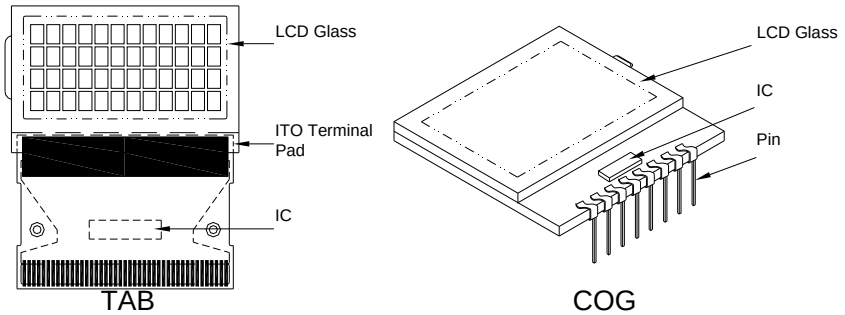

9-3. Sampling Plan and Acceptance

1. Sampling Plan
   MIL - STD - 105E (||) ordinary single inspection is used.
2. Acceptance
   Major defect: AQL = 0.65%
   Minor defect: AQL = 1.5%

7-4. Criteria

1. COB

Defect	Inspection Item	Inspection Standards	
Major	PCB copper flakes peeling off	Any copper flake in viewing Area should be greater than 1.0mm^2	Reject
Major	Height of coating epoxy	Exceed the dimension of drawing	Reject
Major	Void or hole of coating epoxy	Expose bonding wire or IC	Reject
Major	PCB cutting defect	Exceed the dimension of drawing	Reject

2. SMT

Defect	Inspection Item	Inspection Standards	
Minor	Component marking not readable		Reject
Minor	Component height	Exceed the dimension Of drawing	Reject
Major	Component solder defect (missing , extra, wrong component or wrong orientation		Reject
Minor	Component position shift 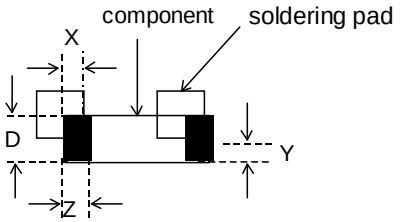	X < 3/4Z Y > 1/3D	Reject Reject
Minor	Component tilt 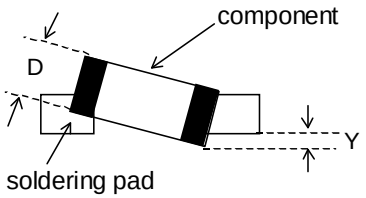	Y > 1/3D	Reject
Minor	Insufficient solder 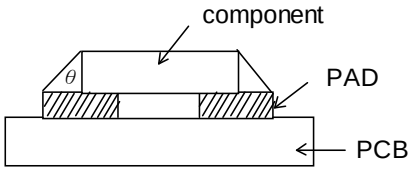	$\theta \leq 20^\circ$	Reject

3. Metal (Plastic) Frame

Defect	Inspection Item	Inspection Standards		
Major	Crack / breakage	Anywhere		Reject
Minor	Frame Scratch	W	L	Acceptable of Scratch
		w<0.1mm	Any	Ignore
		0.1≤w<0.2mm	L≤5.0mm	2
		0.2≤w<0.3mm	L≤3.0mm	1
		w≥0.3mm	Any	0
		Note : 1. Above criteria applicable to scratch lines with distance greater than 5mm. 2. Scratch on the back side of frame (not visible) can be ignored .		
Minor	Frame Dent , Prick $\Phi = \frac{L+W}{2}$			Acceptable of Dents / Pricks
		Φ≤1.0mm		2
		1.0<Φ≤1.5mm		1
		1.5mm<Φ		0
		Note : 1. Above criteria applicable to any two dents / pricks with distance greater than 5mm 2. Dent / prick on the back side of frame (not visible) can be ignored		
Minor	Frame Deformation	Exceed the dimension of drawing		
Minor	Metal Frame Oxidation	Any rust		

4. Flexible Film Connector (FFC)

Defect	Inspection Item	Inspection Standards	
Minor	Tilted soldering	Within the angle +5°	Acceptable
Minor	Uneven solder joint /bump		Reject
Minor	Hole $\Phi = \frac{L+W}{2}$	Expose the conductive line	Reject
		Φ > 1.0mm	Reject
Minor	Position shift 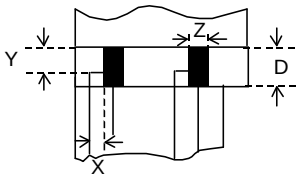 	Y > 1/3D	Reject
		X > 1/2Z	Reject

5.Screw

Defect	Inspection Item	Inspection Standards	
Major	Screw missing/loosen		Reject
Minor	Screw oxidation	Any rust	Reject
Minor	Screw deformation	Difficult to accept screw driver	Reject

6. Heatseal 、TCP 、FPC

Defect	Inspection Item	Inspection Standards	
Major	Scratch expose conductive layer		Reject
Minor	HS Hole $\Phi = \frac{L+W}{2}$	$\Phi > 0.5$mm	Reject
Major	Adhesion strength	Less than the specification	Reject
Minor	Position shift 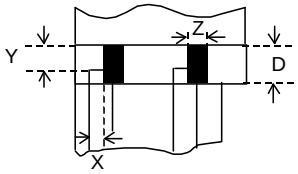	Y > 1/3D	Reject
		X > 1/2Z	Reject
Major	Conductive line break		Reject

7. LED Backing Protective Film and Others

Defect	Inspection Item	Inspection Standards	
Minor	LED dirty, prick	Acceptable number of units	
		$\Phi \leq 0.10$mm	Ignore
		$0.10 < \Phi \leq 0.15$mm	2
		$0.15 < \Phi \leq 0.2$mm	1
		$\Phi > 0.2$mm	0
		The distance between any two spots should be $\geq$5mm Any spot/dot/void outside of viewing area is acceptable	
Minor	Protective film tilt	Not fully cover LCD	Reject
Major	COG coating	Not fully cover ITO circuit	Reject

8. Electric Inspection

Defect	Inspection Item	Inspection Standards	
Major	Short		Reject
Major	Open		Reject

9. Inspection Specification of LCD

Defect	Inspect Item		Inspection Standards				
Minor	Linear Defect	∗ Glass Scratch ∗ Polarizer Scratch ∗ Fiber and Linear material	W	W≤0.03		0.03<W≤0.05	W>0.05
			L	L<5		L<3	Any
			ACC. NO.	1		1	Reject
			Note	L is the length and W is the width of the defect			
Minor	Black Spot and Polarizer Pricked	∗ Foreign material between glass and polarizer or glass and glass ∗ Polarizer hole or protuberance by external force	Φ	Φ≤0.1	0.1<Φ≤0.15	0.15<Φ≤0.2	Φ>0.2
			ACC. NO.	3EA / 100mm^2	2	1	0
			Note	Φ is the average diameter of the defect. Distance between two defects > 10mm.			
Minor	White Spot and Bubble in polarizer	∗ Unobvious transparant foreign material between glass and glass or glass and polarizer ∗ Air protuberance between polarizer and glass	Φ	Φ≤0.3		0.3<Φ≤0.5	0.5<Φ
			ACC. NO.	3EA / 100mm^2		1	0
			Note	Φ is the average diameter of the defect. Distance between two defects > 10mm.			
Minor	Segment Defect	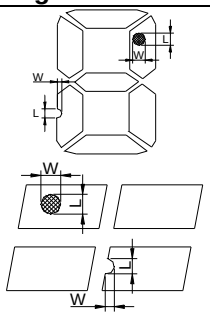	Φ	Φ≤0.10	0.10<Φ≤0.20	0.20<Φ≤0.25	Φ>0.25
			ACC. NO.	3EA / 100mm^2	2	1	0
			Note	W is more than 1/2 segment width			Reject
				$\Phi = \frac{L+W}{2}$ Distance between two defect is 10mm			
Minor	Protuberant Segment	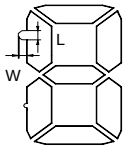 Φ = (L + W) / 2	Φ	Φ≤0.10	0.10<Φ≤0.20	0.20<Φ≤0.25	Φ>0.25
			W	Glue	W≤1/2 Seg W≤0.2	W≤1/2 Seg W≤0.2	Ignore
			ACC. NO.	3EA / 100mm^2	2	1	0
Minor	Assembly Mis-alignment	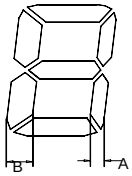	1. Segment				
			B	B≤0.4mm	0.4<B≤1.0mm	B>1.0mm	
			B-A	B-A<1/2B	B-A<0.2	B-A<0.25	
			Judge	Acceptable	Acceptable	Acceptable	
		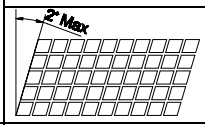	2. Dot Matrix				
			Deformation>2°				Reject
Minor	Stain on LCD Panel Surface		Accept when stains can be wiped lightly with a soft cloth or a similar one. Otherwise, judged according to the above items: “Black spot” and “White Spot”				

10. HANDLING PRECAUTION

(1) Mounting Method

The panel of the LCD Module consists of two thin glass plates with polarizers which easily get damaged since the Module is fixed by utilizing fitting holes in the printed circuit board. Extreme care should be taken when handling the LCD Modules.

(2) Caution of LCD handling & cleaning

When cleaning the display surface, use soft cloth with solvent (recommended below) and wipe lightly.

- Isopropyl alcohol
- Ethyl alcohol
- Trichloro trifloro thane

Do not wipe the display surface with dry or hard materials that will damage the polarizer surface.

Do not use the following solvent:

- Water
- Ketone
- Aromatics

(3) Caution against static charge

The LCD Module use C-MOS LSI drivers, so we recommend that you connect any unused input terminal to VDD or VSS, do not input any signals before power is turned on. And ground your body, Work/assembly table. And assembly equipment to protect against static electricity.

(4) Packaging

- Modules use LCD elements, and must be treated as such. Avoid intense shock and falls from a height.
- To prevent modules from degradation. Do not operate or store them exposed directly to sunshine or high temperature/humidity.

(5) Caution for operation

- It is indispensable to drive LCD's within the specified voltage limit since the higher voltage than the limit shorten LCD life. An electrochemical reaction due to direct current causes LCD deterioration, Avoid the use of direct current drive.
- Response time will be extremely delayed at lower temperature than the operating temperature range and on the other hand at higher temperature LCD's show dark color in them.However those phenomena do not mean malfunction or out of order with LCD's. Which will come back in the specified operating temperature range.
- If the display area is pushed hard during operation, some font will be abnormally displayed but it resumes normal condition after turning off once.
- A slight dew depositing on terminals is a cause for electro-chemical reaction resulting in terminal open circuit.

Usage under the relative condition of 40°C, 50%RH or less is reequired.

(6) Storage

In the case of storing for a long period of time (for instance.) For years) for the purpose or replacement use, The following ways are recommended.

- Storage in a polyethylene bag with sealed so as not to enter fresh air outside in it, And with no desiccant.
- Placing in a dark place where neither exposure to direct sunlight nor light is. Keeping temperature in the specified storage temperature range.
- Storing with no touch on polarizer surface by the anything else. (It is recommended to store them as they have been contained in the inner container at the time of delivery)

(7) Safety

- It is recommendable to crash damaged or unnecessary LCD into pieces and wash off liquid crystal by using solvents such as acetone and ethanol.

Which should be burned up later.

(8) Other

- After the product shipped, any product quality issues must be feedback within three months, otherwise, we will not be responsible for the subsequent or consequential events.